PAC-5070

Linux-based Programmable Automation Controller

- Pre-built Linux 2.6.x OS with file system
- 180MHz ARM9 CPU, 64MB SDRAM and 16MB Flash
- 4x 16-bit high-precision multiplexed analog inputs
- 8x 2500Vrms opto-isolated digital inputs
- 8x 500mA high-drive digital outputs
- Two 10/100Mbps Ethernet ports
- One RS-232 port, one RS-485 port
- Two USB 2.0 host ports for add-on functionality expansion
- One SD memory card slot included for storage expansion
- GNU C/C++ tool chain for Linux/Windows environment
- 9-40VDC input range

Introduction

The PAC-5070 is a Linux-based, network-enabled and Web-ready programmable automation controller, with on-board 16-bit high precision analog inputs, opto-isolated digital inputs and 500mA high-drive digital outputs.

Open and standard programming environment

The PAC-5070 is a true Linux computing platform with file system support. Users can operate the PAC-5070 the same way as they do on a normal Linux desktop.

Open-source GNU Tool Chain, including C/C++ cross-compiler and POSIX standard C/C++ library, is bundled with the PAC-5070 for free.

Network enabled and Web ready

The PAC-5070 provides two 10/100Mbps Ethernet ports. A sophiticated Web server is pre-installed for users to implement applications which need Web-based remote monitor and controls. In addition, it is easy to add IEEE-802.11b/g WiFi support through the PAC-5070's USB 2.0 ports.

High-speed serial interface

Also, the PAC-5070 provides one RS-232 and one RS-485 serial ports, running up to 921.6kbps. The RS-485 port supports hardware direction control.

On-board industrial digital I/Os

The PAC-5070 provides 8 channels of 2500Vrms opto-isolated digital input and 8 channels of 500mA high-drive digital outputs. Each input/output channel comes with a on/off status LED.

16-bit High-precision analog inputs

The PAC-5070 features an on-board 16-bit high-precision A/D converter, which can measure up to 4 channel of mV, V, or 0~20mA analog signals, up to 10 readings per second.

Optional 2GB SD Card for Data Storage

Users can install one standard SD Flash memory card, up to 2GB now, into the PAC-5070 as an additional hard drive.

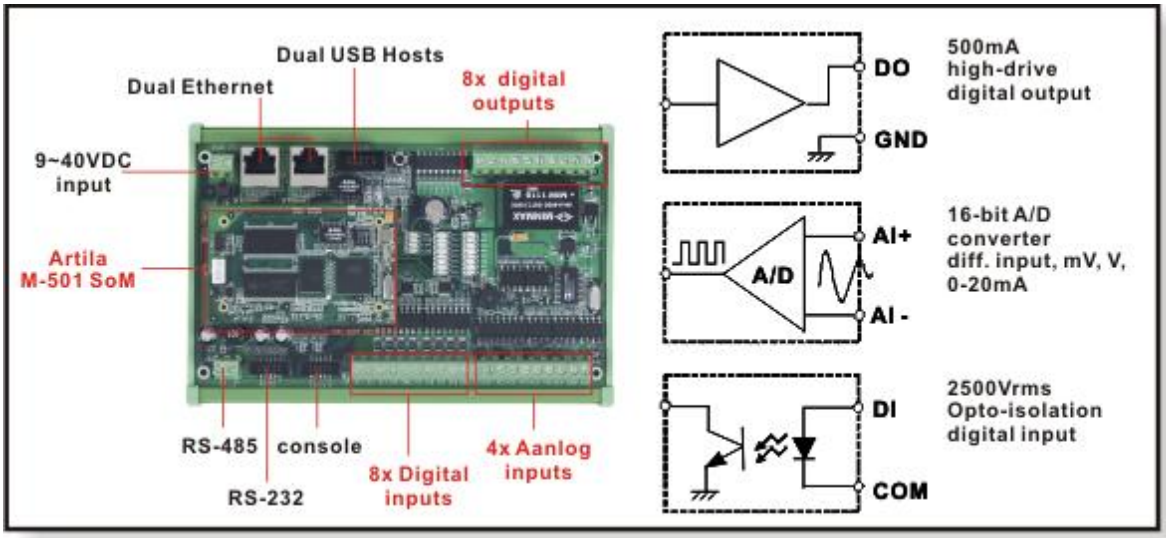

H/W Specifications

CPU/Memory

- CPU: ATMEL 180MHz AT91RM9200 (ARM9, w/MMU)
- Memory: 64MB SDRAM, 16MB Flash

Network Interface

- Two 10/100BaseT, RJ-45 connector

TTY (Serial) Ports

- RS-485: one port, with screw-fixed wiring terminal
  Signals: Data+, Data-, GND
- RS-232: one port, with 10P header
  Signals: Tx, Rx, RTS, CTS, DSR, DTR, DCD, GND
- Cosole: one port, with 10P header
  Signals: Tx, Rx, GND

TTY (Serial) Port Parameters

- Baud Rate: up to 921.6 Kbps
- Parity: None, Even, Odd, Mark, Space
- Data Bits: 5,6,7,8
- Stop Bit: 1, 1.5, 2 bits
- Flow Control: RTS/CTS, XON/XOFF, None

USB Host Ports

- Two USB 2.0 compliant hosts, with 10P header
- Data rate: up to 12Mbps

Mass Storage

- One SD 1.0 compliant socket inside

General

- WatchDog Timer: yes, for kernel use
- Real Time Clock: yes
- Buzzer: yes
- Power input: 9~40VDC
- Power consumption: 800mA@12VDC
- Dimension: 160 x 104 x 32mm
- Operation Temperature: 0 to 70C(32 to 158F)
- Regulation: CE Class A, FCC Class A

S/W Specifications

General

- OS: Linux, kernel 2.6.x
- Boot Loader: U-Boot 1.1.2
- File Systems: JFFS2, ETX2/ETX3, VFAT/FAT, NFS

Protocol stacks

- IPv4, ICMP, ARP, DHCP, NTP, TCP, UDP, FTP, Telnet, HTTP, PPP, PPPoE, CHAP, PAP, SMTP, SNMP V1/V2, SSL, SSH 1.0/2.0

Utilities

- bash: shell command
- tinylogin: login and user manager utility
- telnet: Telnet client program
- busybox: Linux utility collection
- ftp: FTP client program

Daemon

- pppd: Dial In/out over serial port and PPPoE
- snmpd: SNMP agent program
- telnetd: Telnet server program
- inetd: TCP server program
- ftpd: FTP server program
- boa: Web server program
- sshd: secured shell server
- iptables: Firewall service manager
- armd: Artila manager daemon

Tool Chain for Linux

- GCC: C/C++ PC cross compiler for Linux, CygWin
- GLIBC: POSIX Library

Device Drivers

- SD/MMC, UART, Real Time Clock, Buzzer, Digital I/O, Ethernet, Watchdog Timer

USB Host Drivers (could be customized)

- Flash disk
- WiFi (IEEE-802.11b/g)
- RS-232 adaptors

Industrial Digital I/Os

Isolated Digital Input

- No. of channels: 8
- Logical high: 5 ~ 24VDC
- Logical low: 0 ~ 1.5VDC
- Input resistance: 1.2k ohms@0.5W
- Response time: 20us
- Opto-isolation: 2500Vrms

500mA Digital Output

- No. of channels: 8
- Source driver: UDN2981A (Allegro)
- Source voltage (VDD): 5~50VDC
- Output current: 500mA max.

High-precision Analog Input

General

- A/D converter: AD7712 (Analog Device)
- No. of channels: 4, multiplexed, 10 readings per second
- Resolution: 16-bit
- Accuracy: +/- 1%
- Voltage input mode: differential, 100db CMR
- Voltage input impedance: 20M Ohms
- Current input impedance: 120 Ohms
- Isolation protection: 1500Vdc

Input range (select by software)

- 0~150mV, 0~500mV, +/- 150mV, +/- 500mV
- 0~1V, 0~5V, 0~10V, +/-1V, +/-5V, +/-10V
- 0~20mA